M101Q9

10.1” Qualcomm® 6490 Android Rugged Tablet



KEY FEATURES

- 10.1” 1920x1200 LED Panel with PCAP Touch
- Android 15.0
- Qualcomm® 6490, Octa-Core, up to 2.7GHz
- Support WLAN
- Optional WWAN 4G and 5G
- MIL-STD-810H Shock / Drop / Vibration Compliant
- Optional Barcode Reader and NFC Reader

INTRODUCTION

Winmate M101Q9 is a 10.1-inch Qualcomm® 6490 Android Rugged Tablet engineered for field service, inspection, and industrial mobility. It combines Qualcomm® 6490, 10.1-inch display with 1920x1200 resolution, and IP65 to support reliable operation in harsh industrial environments. With MIL-STD-810H, the M101Q9 helps OEMs, system integrators, and project teams deploy durable, configurable solutions for demanding field, factory, and mission-critical applications.

SPECIFICATIONS

Display

Resolution	1920x1200	**Size**	10.1 inches
Contrast Ratio	800:1	**Panel Brightness**	800.0 nits
View Angles	85,85,85,85	**Bonding**	Optical Bonding for Sunlight Viewability
Type	Projected Capacitive Multi Touch	**Viewability**	Anti-Glare touch treatment
Touch Mode	Support Hand / Gloves and Rain Mode		

System Specification

Processor	Qualcomm® 6490, Octa-Core, up to 2.7GHz	**Memory**	8GB
Storage	128GB	**Operating System**	Android 15.0 (Default) Android 13.0 (Optional)
WLAN	Support	**BT**	Support
WWAN	4G (Optional) 5G (Optional)	**GNSS**	GPS/GLONASS
RFID	NFC (Read / Write, Peer to Peer mode) (Optional)	**Sensors**	Ambient Light Sensor, E-Compass, Gyro, Acceleration Sensors

Camera

Front Camera	8MP Camera	**Rear Camera**	16MP Camera with LED Auxiliary Light (Auto Focus)

Mechanical

Dimension	271.9 x 197.3 x 19.5 mm	**Weight**	1.2 kg (2.65 lbs) with standard battery, 1.4 kg (3.1 lbs) with optional high capacity battery
Cooling System	Fanless Design		

IO Ports

USB Port	1 x USB 3.0 Type C OTG (Type C support Power Delivery) 1 x USB 2.0 Type A	**SD Card Slot**	1 x Micro SD Card Slot
SIM Card Slot	1 x SIM Card Slot	**Audio**	1 x Audio Combo connector (Mic in or Line Out) 1 x Built-in Mic 2 x Speaker
	1 x LED Indicators (Power, Battery)	**Docking Connector**	1 x Docking Connector

Environment

Operating Humidity	10% to 90% RH, Non-Condensing	**Operating Temperature**	-20°C to 60°C
Storage Temperature	-30°C to 70°C	**Shock**	MIL-STD-810H Method 516.8 Procedure I
Vibration	MIL-STD-810H Method 514.8 Procedure I	**IP rating**	IP65
Drop	MIL-STD-810H Method 516.8, 4 ft		

Certification

Certification	CE, FCC

Control

Button	1 x Volume +/-, 1 x Home Button, 1 x ,Return Button, 1 x Power Button, 1 x Function Button

Power

Battery	7.7V, typ. 5900 mAh LiPolymer Battery (2S1P) (Default) 7.4V, typ. 10280 mAh LiPolymer Battery (2S2P) (Optional) Warm swappable function (Optional)	**Battery Operating Time**	8Hr
Power Rating	19V	**Adapter**	19V 3.42A Adapter

Security Function

SOTI MobiControl	SOTI MobiControl Compliance	**Kensington Lock**	Kensington Lock

Accessory

Accessory	Adapter and Power Cord Standard Battery Capacitive Stylus	**Optional Accessory**	High Capacity Battery Desk Dock Vehicle Dock Vehicle Cradle Battery Charger Vehicle Charger Metal Vehicle Dock Hand Strap VESA Mount Kit Shoulder Strap Carry Bag Micro SD Card USB-C to HDMI Adapter Stand with Integrated Handle

Barcode Scanner

Barcode Scanner	1D/2D Barcode Reader (Optional)

DIMENSIONS UNIT:MM

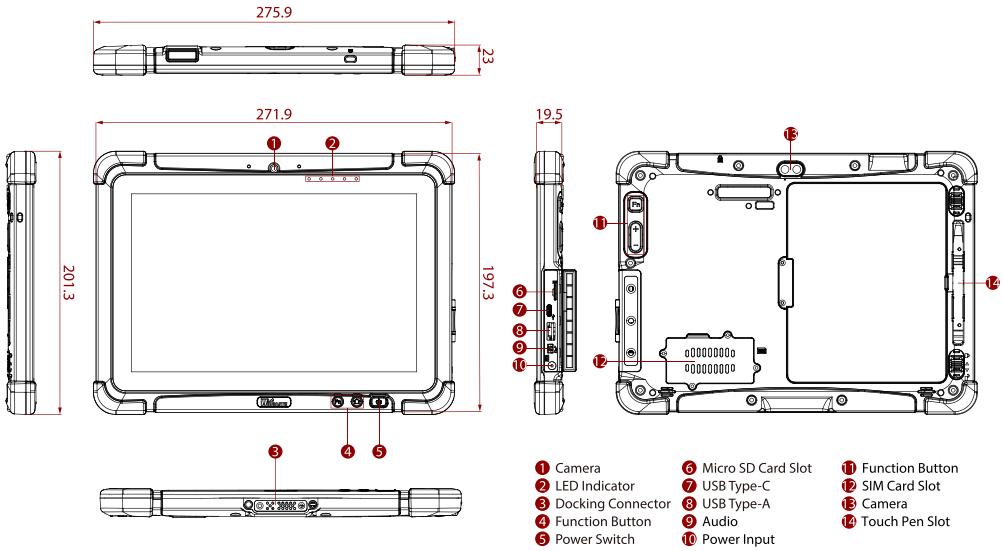

NOTE

1. Total usable memory will be less dependent upon actual system configuration.
2. Length measurements do not include protrusions. Weight varies with options.
3. Measured at dimming LCD brightness. Varies depending on the usage conditions.
4. Accessories may vary depending on your configuration.
5. This is a simplified drawing and some components are not marked in detail.
6. The product shown in this datasheet is a standard model. For diagrams that contain customized or optional I/O, please contact the Winmate Sales Team for more information